POWERLINK
Air Systems

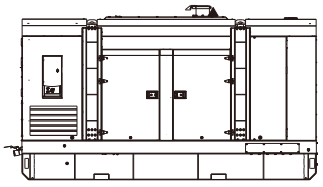

DIESEL ENGINE DRIVEN STATIONARY AIR COMPRESSOR

DS1350-25

SPECIFICATIONS

www.powerlinkenergy.com

DS1350-25

Stationary Air Compressor

1 Standards & Conditions

Design Standards

The designs and the productions are in conformity with:

- JB/T6430-2002
- JB/T3771-1992
- JB/T4223-2007
- GB/T15487
- ISO 1217
- ISO 2151
- ASME B 19.1-1990

Environmental Operating Conditions

- Installation place: Outdoors or indoors (well ventilated).
- Ambient temperature: -25℃ to 45℃.The coolant heater is needed when the temperature is below 5℃
- Humidity: Less than 80%.
- Altitude: Below one thousand (1000) meters.

Factory Inspection

- Inspection items.
- Protection devices working test.
- Starting ability in normal temperature.
- 2 hours performance test of continuous full load.
- Performance test, including flux, pressure, temperature, noise, thermal balance etc.

Painting Process

- Painting process specifications and colors are based on the manufacturer's standard.
- The customer could also choose the color which the manufacturer offers.

2 General Features

- Cummins diesel engine
- Oil-injection double-screw air compressor
- ACP controller with microprocessor technique
- Suction valve
- Low pressure solenoid valve
- High pressure solenoid valve
- Low pressure regular valve
- High pressure regular valve
- Safety valve
- Minimum pressure valve
- Vent valve
- Shuttle valve
- Oil thermostatic valve
- 50℃ radiator
- Lubricating oil radiator
- Double layer air filter
- Lubricating oil filter
- Vertical air/oil tank (ASME approval)
- Air/oil separator
- Emergency stop button
- Lockable battery isolator switch
- 2x12V/120AH sealed for life maintenance free battery
- Fuel tank for 8 hours running
- Powder coated canopy

3 Equipment Specification

Air Compressor

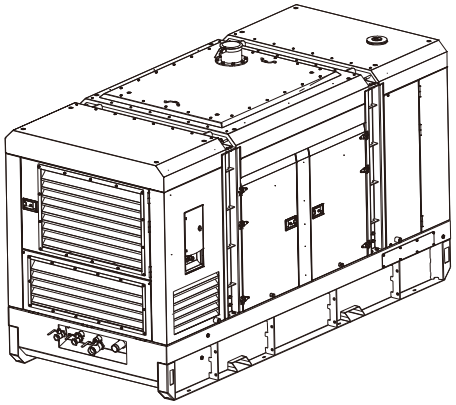

Model.....DS1350-25

Drive type ..... Diesel engine driven

Speed under full load.....1800rpm

Rated flux .....1344cfm(38.39m³/min)

Max. unloading pressure 25.0bar

Min. working pressure 5.0bar

Discharge port .....G2 1/2+2xG1 1/2

Total capacity of oil system.....30L

Lubricating oil type..... Synthetic oil

Total capacity of coolant system.....112L

Fuel tank capacity.....1150L

Dry weight.....7694kg

Dimensions L×W×H.....4500x1980x2452mm

Note: all pressures in the manual are relative values (compared with atmospheric pressure)

Diesel Engine

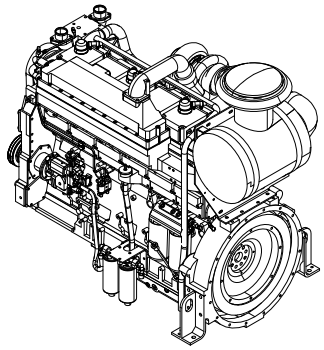

Engine Manufacturer/Brand.....Cummins
Engine Model.....KTA19-P700
Dimensions L×W×H.....N/A
Dry Weigh (approx.) 1633Kg
Number of Cylinders.....6
Bore 159mm
Stroke 159mm
Displacement.....19L
Compression Ratio 13.9
Type of injection..... Direct injection
Intake System..... Turbocharged
Intake Resistance .....≤6.23
Cooling System .....Water cooled
Fan ..... Pusher
Battery Voltage 24V
Type of Fuel..... No.2-ASTM D975
Type of Oil ..... API CD/SE or CCMCD4
Oil Capacity 47.3L
Type of Coolant ..... Glycol mixture
Coolant Capacity 30L
Back Pressure ..... ≤10.0
MAX.....522kW
Fuel Consumption(100%load).....215g/kW.h

Compressor

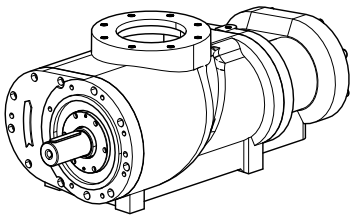

Structure .....Oil-injection double-screw
Axis power 522kW
Suction temperature ..... 0-40℃
Working pressure .....≤25.0bar
Rated speed 1800rpm
Speed ratio .....N/A
Weight 1700kg

Control Cabinet

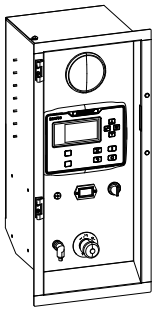

ACP of the machine is an advanced control module based on microprocessor for the automatic control and monitor system of the air compressor, realizing auto start/stop, data measure and alarm protection function. During running the module can accurately measure various parameters, like engine oil pressure, coolant temperature, discharge temperature and pressure etc. and display real values on LCD. When there is any fault, the control module alarms or stops the engine automatically and displays alarm information on LCD.

- Microprocessor control, with high stability and credibility
- Monitoring and measuring operational parameters of the air compressor
- Indicating operation status, fault conditions, all parameters and alarms
- Multiple protections; multiple parameters display, like engine oil pressure, discharge temperature and pressure etc.
- Manual and remote work mode selectable
- Real time clock for time and date display, overall runtime display
- Many configurable parameters from control panel

Warning Item	Shutdown Item
High discharge temperature	Emergency stop
High discharge pressure	Failure to start
High coolant temperature	High discharge temperature
Low engine oil pressure	High discharge pressure
Low fuel level	High coolant temperature
Low coolant level	Low engine oil pressure
Ail filter clogged	Low fuel level
Failure to stop	Low coolant level
Battery charge failure	Ail filter clogged
Low battery voltage	
High battery voltage	

4 Air and Oil Path System

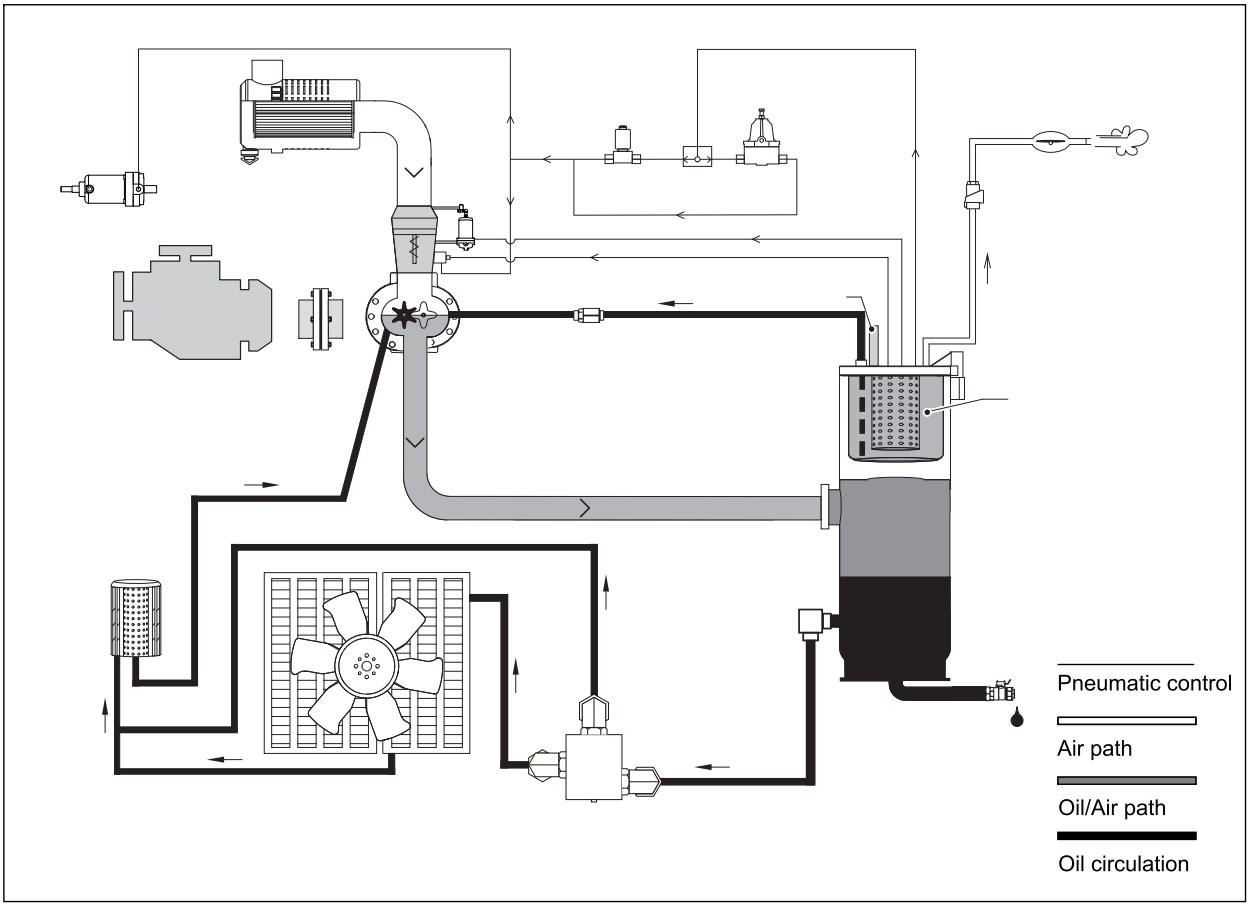

- Suction Valve
  Control mode..... Direct proportion
  Working pressure .....≤25.0bar
- Pressure Regular Valve
  Working pressure 25.0bar
  Pressure setting mode ..... Manual
- Minimum Pressure Valve
  Activation pressure.....5.0bar
  Fully opened pressure..... 5.0-5.5bar
- Thermostatic Valve
  Activation temperature ..... 85℃
  Fully opened temperature ..... 100℃
- Air/oil Tank
  Working pressure .....≤25.0bar
  Activation pressure of safety valve.....27.5.0bar
- Air/oil Separator
  Working pressure .....≤25.0bar
  Oil residue ratio (appro.) .....≤3ppm

5 Control System

Control Cabinet

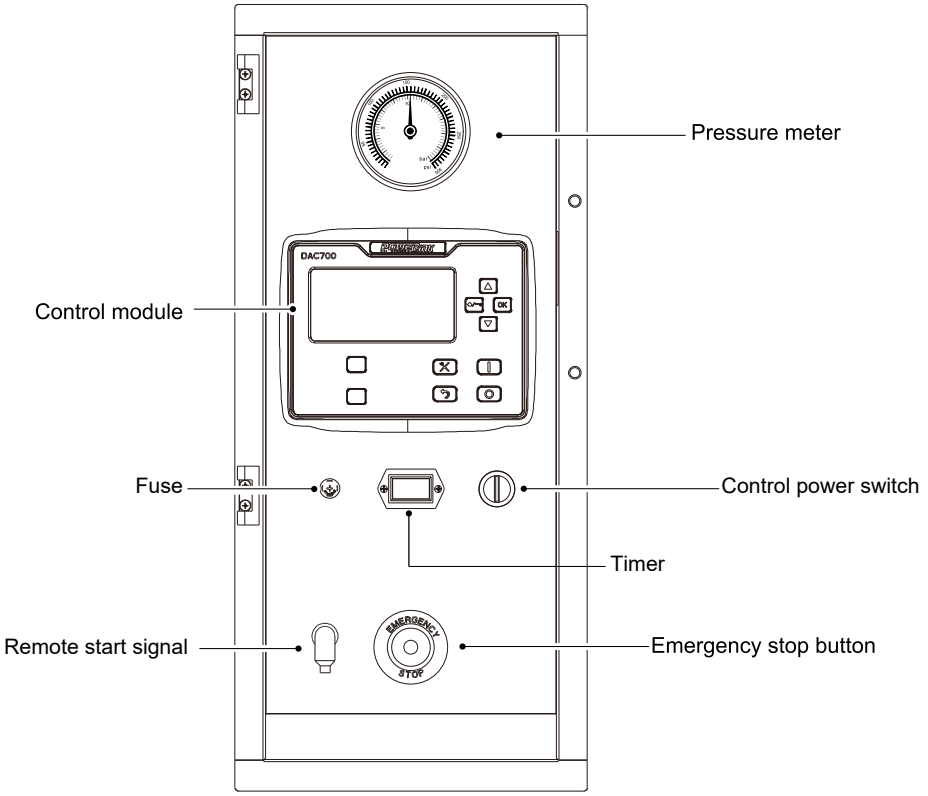

Control Module

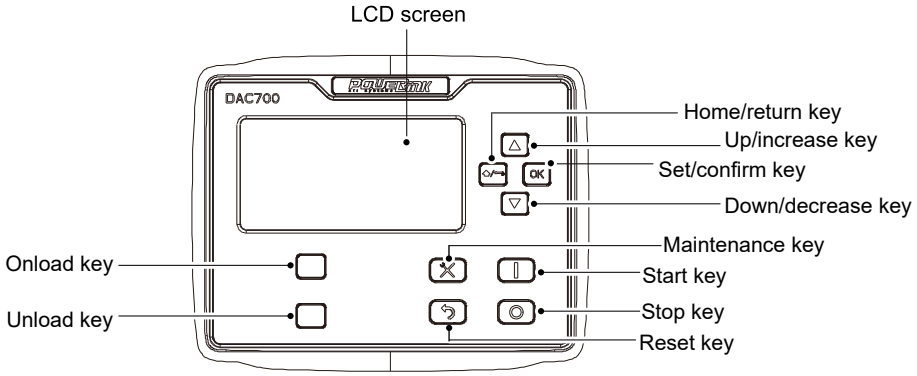

6 Overall Dimensions

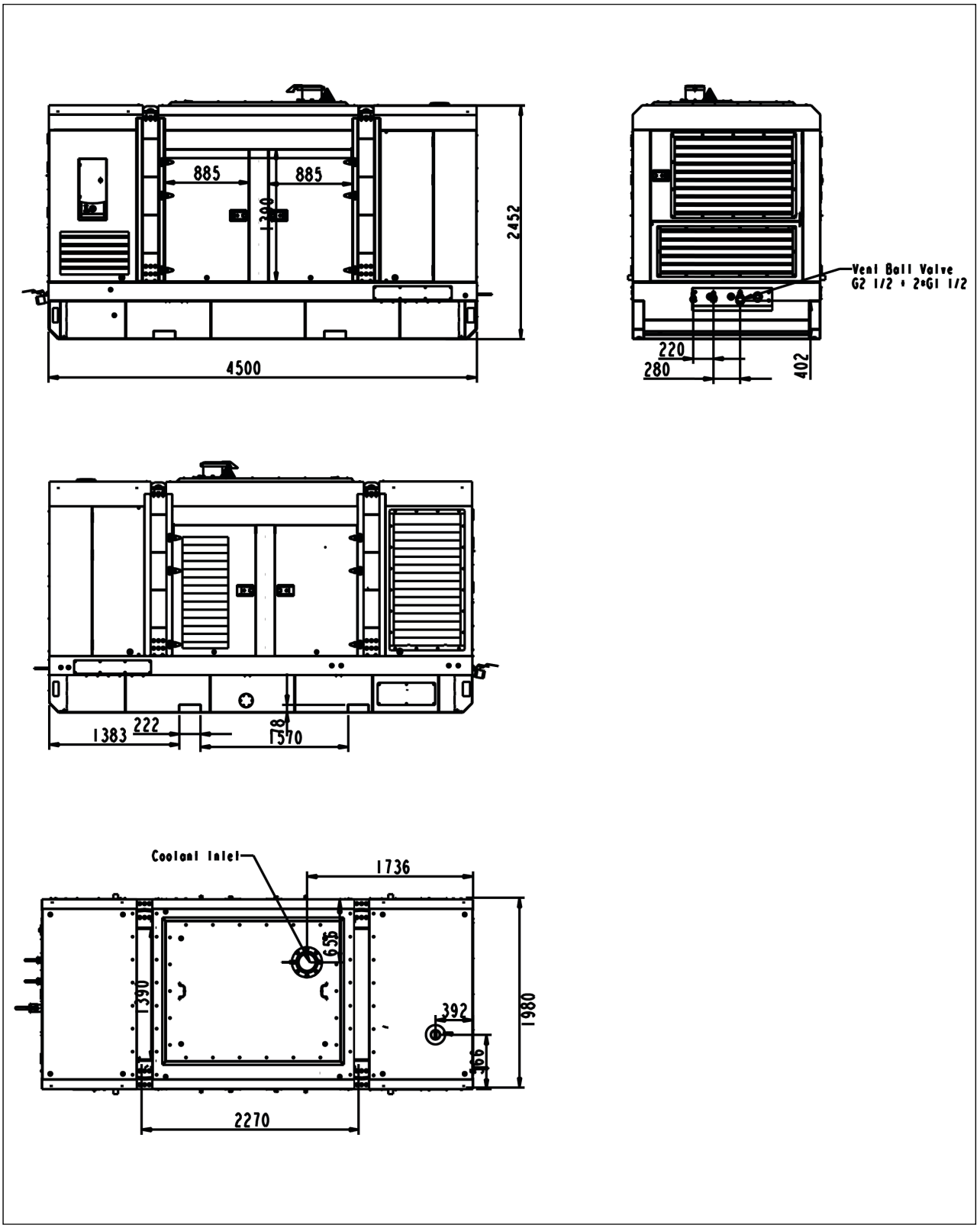

3000040292-A11–E
10.2024

http://www.powerlinkenergy.com

Specification may change without prior notice. For more info., contact Power Link or your local distributors please.

©2024 POWERLINK